CL SERIES EVENT RENTAL LED DISPLAY

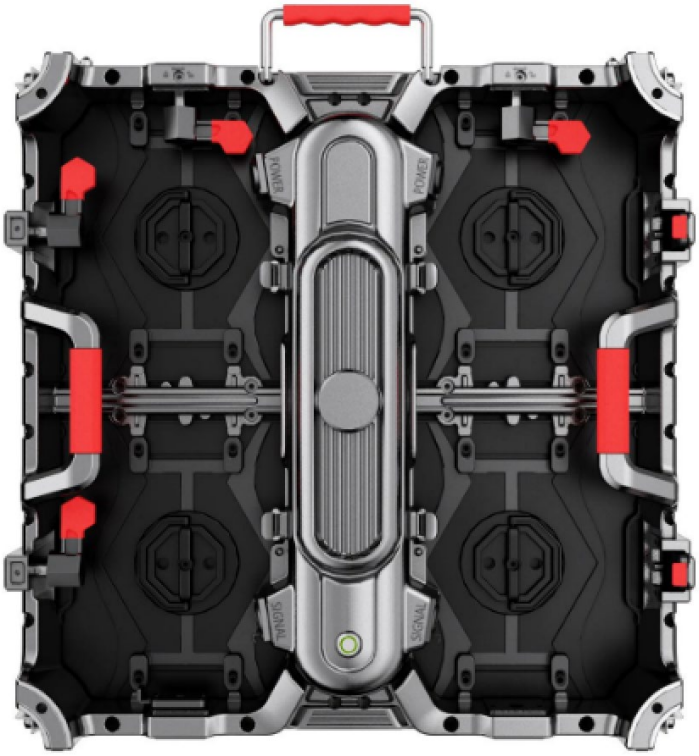

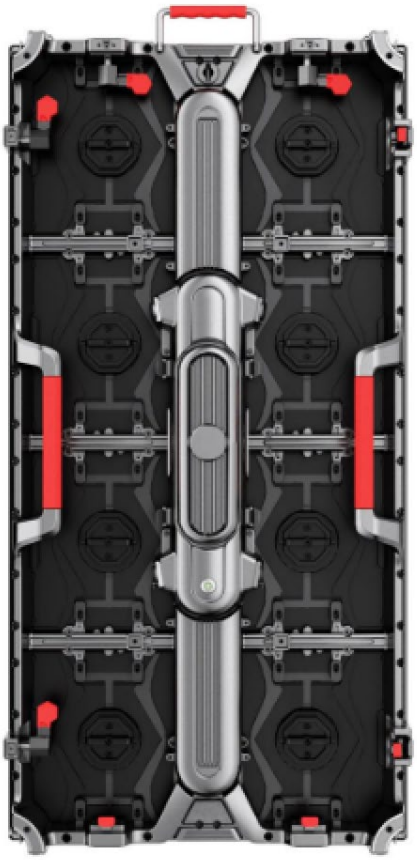

CL series event rental LED display is universal designfor high end event rental market. It is suitable for most indoor and outdoor event and stage rental application and covers the wide range of pixel pitch.

Cabinet can be made into straight, curved shape, rectangle shape, wavy shape.etc.

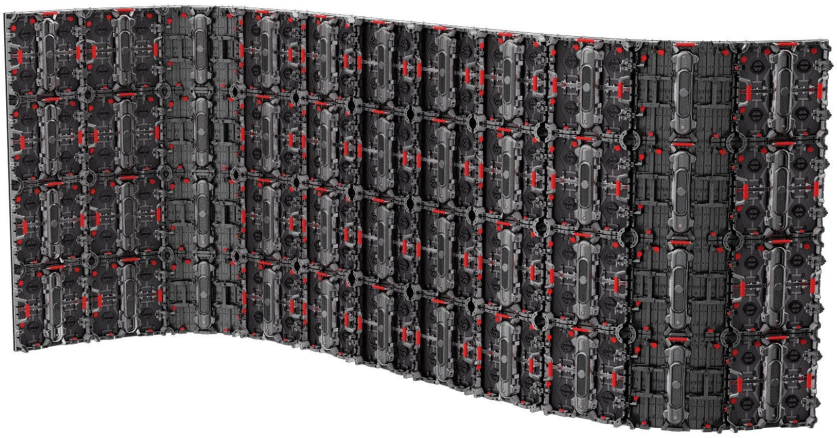

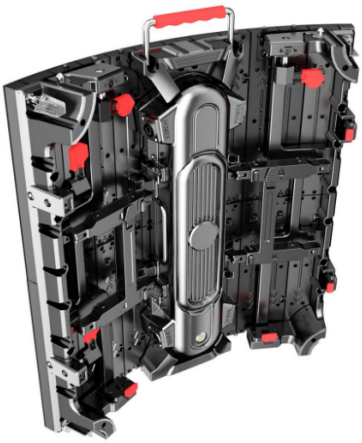

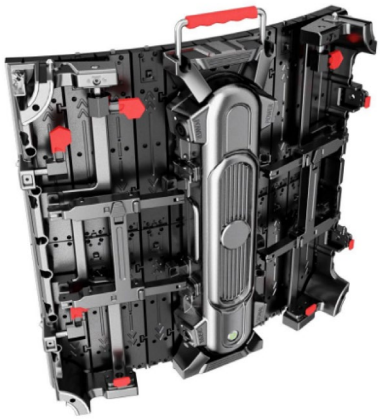

Wavy shape

Rectangle shape

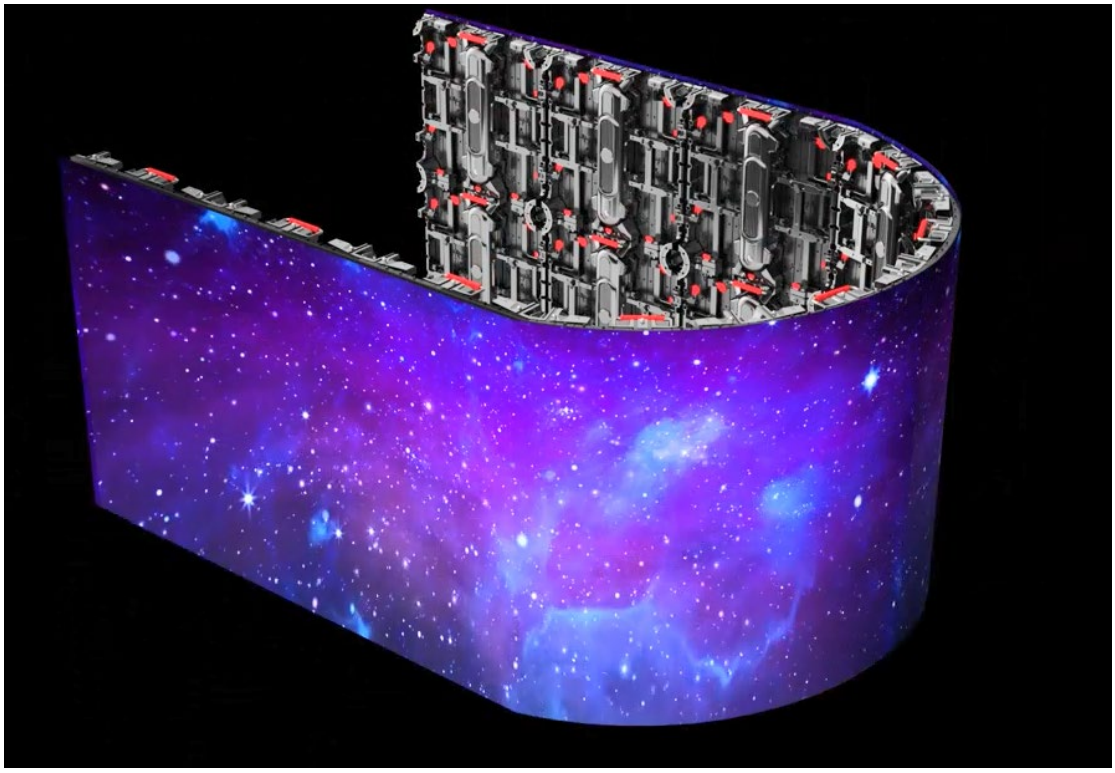

Straight and curved cabinet combination

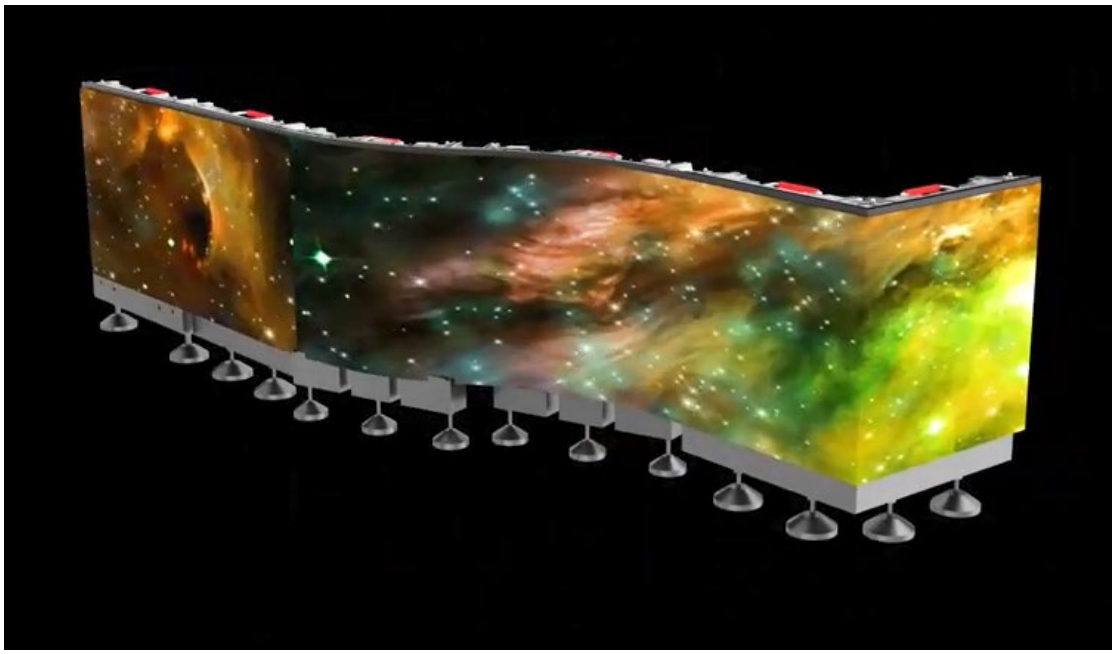

Straight, curved and rectangle combination

Suitable for most stage design shapes.

Support hanging and stacking installation

Indoor and outdoor modules can do both front or back service type.

Specs data

CL 500*500mm event rental led display Series Indoor Models

Model	P1.95-1/32 scan indoor	P2.604-1/32 scan indoor	P2.976-1/28 scan indoor	P3.91-1/16 scan indoor
Pixel configuration	SMD1515 black led lamp	SMD1515 or SMD2121 black led lamp	SMD1515 or SMD2121 black led lamp	SMD2121 black led lamp
Pixel pitch	1.95mm	2.604mm	2.976mm	3.91mm
Scan rate	1/32 scanning, constant current	1/32 scanning, constant current	1/28 scanning, constant current	1/16 scanning, constant current
Module size（W×H)	250*250MM	250*250MM	250*250MM	250*250MM
Resolution per module	W 128 x H 128 pixels	W 96 x H 96 pixels	W 84 x H 84pixels	W 64 x H 64pixels
Standard cabinet dimension(W×H×D)	500×500×85mm	500×500×85mm	500×500×85mm	500×500×85mm
Pixel resolution/cabinet (W×H)	256 x 256pixels	192 x 192pixels	168 x 168pixels	128 x 128pixels
Resolution/sqm	262,144dots/㎡	147,456 dots/㎡	112,896 dots/㎡	65,536dots/㎡
Minimum viewing distance	Minimum 1.9 meters	Minimum 2.6 meters	Minimum 2.9 meters	Minimum 3.9 meters
Brightness	900CD/M2	900(SMD1515)-1200CD/M2	900(SMD1515)-1200CD/M2	1200CD/M2
Gray scale	16 bit, 65536 steps	16 bit, 65536 steps	16 bit, 65536 steps	16 bit, 65536 steps
Color Number	281trillion	281trillion	281trillion	281trillion
Display Mode	Synchronous with video source	Synchronous with video source	Synchronous with video source	Synchronous with video source
Refresh rate	≥3840HZ	≥3840HZ	≥3840HZ	≥3840HZ
Viewing angle(degree)	H/160,V/140	H/160,V/140	H/160,V/140	H/160,V/140
Temperature range	-20℃ to +60℃	-20℃ to +60℃	-20℃ to +60℃	-20℃ to +60℃
Ambient Humidity	10%-99%	10%-99%	10%-99%	10%-99%
Service access	front and rear	front and rear	front and rear	front and rear
Standard cabinet weight	7.5kgs/cabinet	7.5kgs/cabinet	7.5kgs/cabinet	7.5kgs/cabinet
Max.Power Consumption	Max: 150w/panel	Max: 150w/panel	Max: 150w/panel	Max: 150w/panel
Protection Level	Front/rear: IP43	Front/rear: IP43	Front/rear: IP43	Front/rear: IP43
Lifetime to 50% brightness	75,000hr	75,000hr	75,000hr	75,000hr
LED Failure Rate	<0,00001	<0,00001	<0,00001	<0,00001
MTBF	> 10.000 hours	> 10.000 hours	> 10.000 hours	> 10.000 hours
Input power cable	AC90-264V 50/60HZ	AC90-264V 50/60HZ	AC90-264V 50/60HZ	AC90-264V 50/60HZ
Signal input	DVI HDMI	DVI HDMI	DVI HDMI	DVI HDMI

CL 500*500mm event rental led display Series outdoor Models

Model	P2.604-1/24 scan outdoor	P2.976-1/28 scan outdoor	P3.91-1/16 scan outdoor	P3.91-1/8 scan outdoor
Pixel configuration	SMD1415 LED lamp	SMD1415 LED lamp	SMD1921 LED lamp	SMD1921 LED lamp
Pixel pitch	2.604mm	2.976mm	3.91mm	3.91mm
Scan rate	1/24 scanning, constant current	1/28 scanning, constant current	1/16 scanning, constant current	1/8 scanning, constant current
Module size（W×H)	250*250MM	250*250MM	250*250MM	250*250MM
Resolution per module	W 96x H 96pixels	W 84 x H 84pixels	W 64 x H 64pixels	W 64 x H 64pixels
Standard cabinet dimension(W×H×D)	500×500×85mm	500×500×85mm	500×500×85mm	500×500×85mm
Pixel resolution/cabinet (W×H)	128 x 128 pixels	168 x 168pixels	128 x 128 pixels	128 x 128 pixels
Resolution/sqm	65,536dots/㎡	112,896 dots/㎡	65,536dots/㎡	65,536dots/㎡
Minimum viewing distance	Minimum 3.9 meters	Minimum 2.9 meters	Minimum 3.9 meters	Minimum 3.9 meters
Brightness	4500CD/M2	4500CD/M2	4500CD/M2	6500CD/M2
Gray scale	16 bit, 65536 steps	16 bit, 65536 steps	16 bit, 65536 steps	16 bit, 65536 steps
Color Number	281trillion	281trillion	281trillion	281trillion
Display Mode	Synchronous with video source	Synchronous with video source	Synchronous with video source	Synchronous with video source
Refresh rate	≥3840HZ	≥3840HZ	≥3840HZ	≥3840HZ

Viewing angle(degree)	H/160,V/140	H/160,V/140	H/160,V/140	H/160,V/140
Temperature range	-20℃ to +60℃	-20℃ to +60℃	-20℃ to +60℃	-20℃ to +60℃
Ambient Humidity	10%-99%	10%-99%	10%-99%	10%-99%
Service access	front and rear	front and rear	front and rear	front and rear
Standard cabinet weight	8.5kgs/cabinet	8.5kgs/cabinet	8.5kgs/cabinet	8.5kgs/cabinet
Max.Power Consumption	Max: 240w/panel	Max: 240w/panel	Max: 240w/panel	Max: 240w/panel
Protection Level	Front: IP65 rear:IP54	Front: IP65 rear:IP54	Front: IP65 rear:IP54	Front: IP65 rear:IP54
Lifetime to 50% brightness	75,000hr	75,000hr	75,000hr	75,000hr
LED Failure Rate	<0,00001	<0,00001	<0,00001	<0,00001
MTBF	> 10.000 hours	> 10.000 hours	> 10.000 hours	> 10.000 hours
Input power cable	AC90-264V 50/60HZ	AC90-264V 50/60HZ	AC90-264V 50/60HZ	AC90-264V 50/60HZ
Signal input	DVI HDMI	DVI HDMI	DVI HDMI	DVI HDMI

Remarks: due to the configuration, the specs may change.